PROJECT 30: Design and Analysis of SR Flip-Flop by using Cadence Virtuoso

A Comprehensive Study of Analog Circuits

By: Priya Chaudhary, Astitva Johri and Bhavya Solanki

Chapters:

List of Figures……..…… 3

1. Introduction …….. 4
2. Brief Description…… 5
3. Circuit Design……. 6-7
   3.1 Schematic Design……... 6
   3.2 Simulation Setup...…….. 6
   3.3 Transient Response……. 6
4. Simulation Results…….. 8
5. Advantages and Disadvantages…….. 9
   5.1 Advantages……. 9
   5.2 Disadvantages……. 9
6. Conclusion…….. 10
7. Frequently Asked Questions (FAQs)…….. 11

LIST OF FIGURES

Figure 3.1 Circuit of NAND Gate ……..……..…... 7

Figure 3.2 Circuit of SR Flip-Flop …….……..…... 7

Figure 4.1 Simulation Results of SR Flip-Flop ……..... 8

1. INTRODUCTION

Flip-flops are fundamental bistable memory elements used in sequential circuits for data storage and synchronization. Among various types, the **Set-Reset (SR) flip-flop** is the simplest, functioning as a basic memory unit that stores one bit of data. It has two inputs—Set (S) and Reset (R)—and two outputs, **Q** and **Q'** (complement of Q).
An SR flip-flop can be implemented using **NAND gates**, which are universal logic gates, making the design efficient and practical for integrated circuits. The **NAND-based SR flip-flop** operates with active-low inputs, meaning both inputs should not be low simultaneously to avoid an undefined state.

This project focuses on designing and analyzing the **SR flip-flop using NAND gates in Cadence Virtuoso**, an industry-standard EDA tool for IC design and verification. The simulation results help in understanding its operation, timing characteristics, and practical applications in digital systems such as registers, counters, and memory circuits.

Truth Table of SR Flip-Flop :-

S (Set)	R (Reset)	Q (Output)	Q' (Complement Output)	State
0	0	Invalid	Invalid	Forbidden
0	1	1	0	Set
1	0	0	1	Reset
1	1	Q (Previous)	Q' (Previous)	No Change

2. BRIEF DESCRIPTION

An **SR (Set-Reset) flip-flop** is a fundamental sequential circuit that stores one bit of information. It consists of two inputs:

- **Set (S):** Used to set the output to logic high (1).
- **Reset (R):** Used to reset the output to logic low (0).

The flip-flop maintains its state until a new input is applied, making it useful for memory storage and sequential logic design.

SR Flip-Flop Using NAND Gates

The **NAND-based SR flip-flop** operates with **active-low inputs**, meaning a logic **0** at the inputs triggers state changes. It consists of two cross-coupled **NAND gates**, forming a **feedback loop** to store data.

Operation of NAND-Based SR Flip-Flop

- **Set Condition (S = 0, R = 1):** The output **Q** is set to **1** and remains high.
- **Reset Condition (S = 1, R = 0):** The output **Q** is reset to **0** and remains low.
- **No Change Condition (S = 1, R = 1):** The output retains its previous state.
- **Invalid Condition (S = 0, R = 0):** Both outputs become undefined, leading to an unstable state.

The **SR flip-flop** is commonly used in latches, memory elements, and control circuits due to its simple design and reliable operation.

3. CIRCUIT DESIGN

3.1 Schematic Design

- Open Cadence Virtuoso and create a new schematic cell.
- Place two 2-input NAND gates and connect them in a cross-coupled configuration.
- Add input terminals S (Set) and R (Reset), and output terminals Q and Q'.
- Verify connections and save the schematic.

3.2 Simulation Setup

- Open **ADE Explorer** and set up a testbench.
- Use **VPULSE sources** for **S** and **R** inputs.
- Apply **VDD and GND** for power supply.
- Configure **Transient Analysis** (tran) and set a stop time (e.g., **1µs**).
- Run the simulation and observe waveforms.

3.3 Transient Response

- S = 0, R = 1 → Q = 1 (Set state)
- S = 1, R = 0 → Q = 0 (Reset state)
- S = 1, R = 1 → Hold previous state
- S = 0, R = 0 → Invalid state (undefined output)
- The **Q** and **Q'** outputs should transition accordingly based on the applied **S** and **R** pulses.
- The waveform should match the theoretical truth table of the **SR flip-flop**.
- Any glitches or unexpected behavior could indicate setup or timing issues.

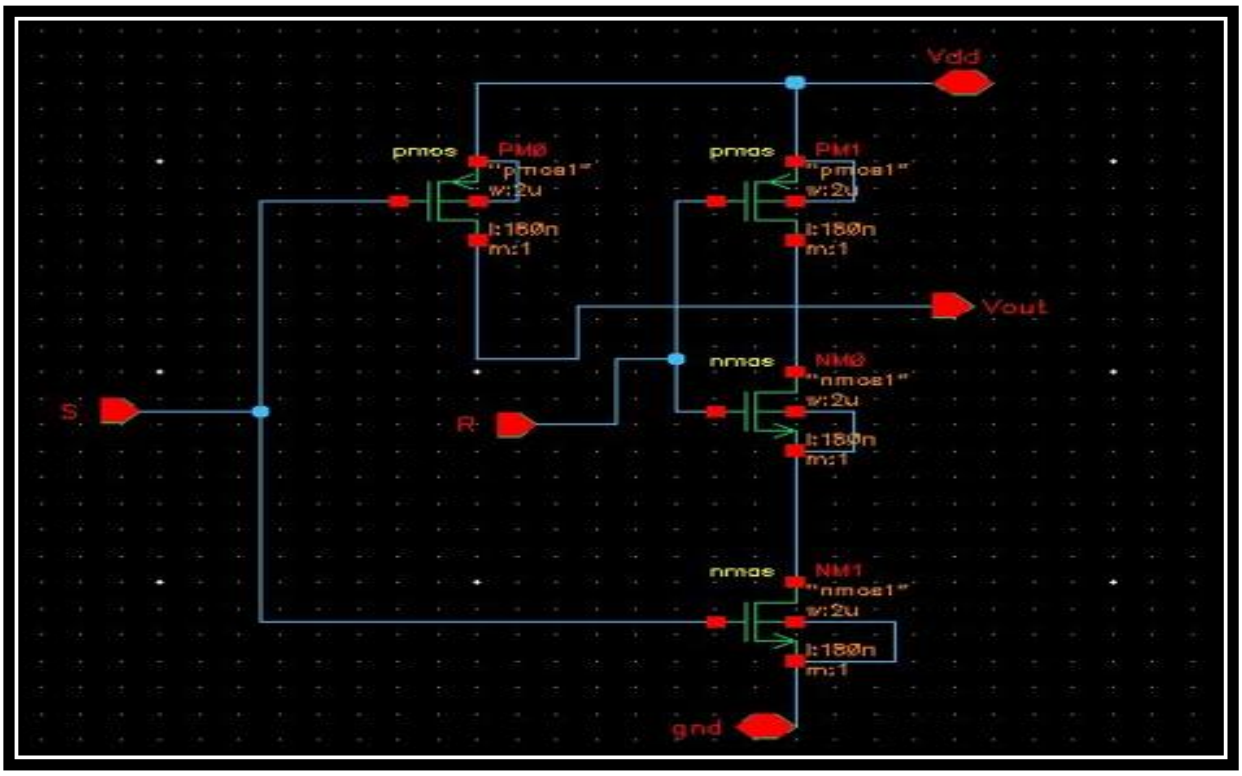

Figure 3.1 Circuit of NAND Gate

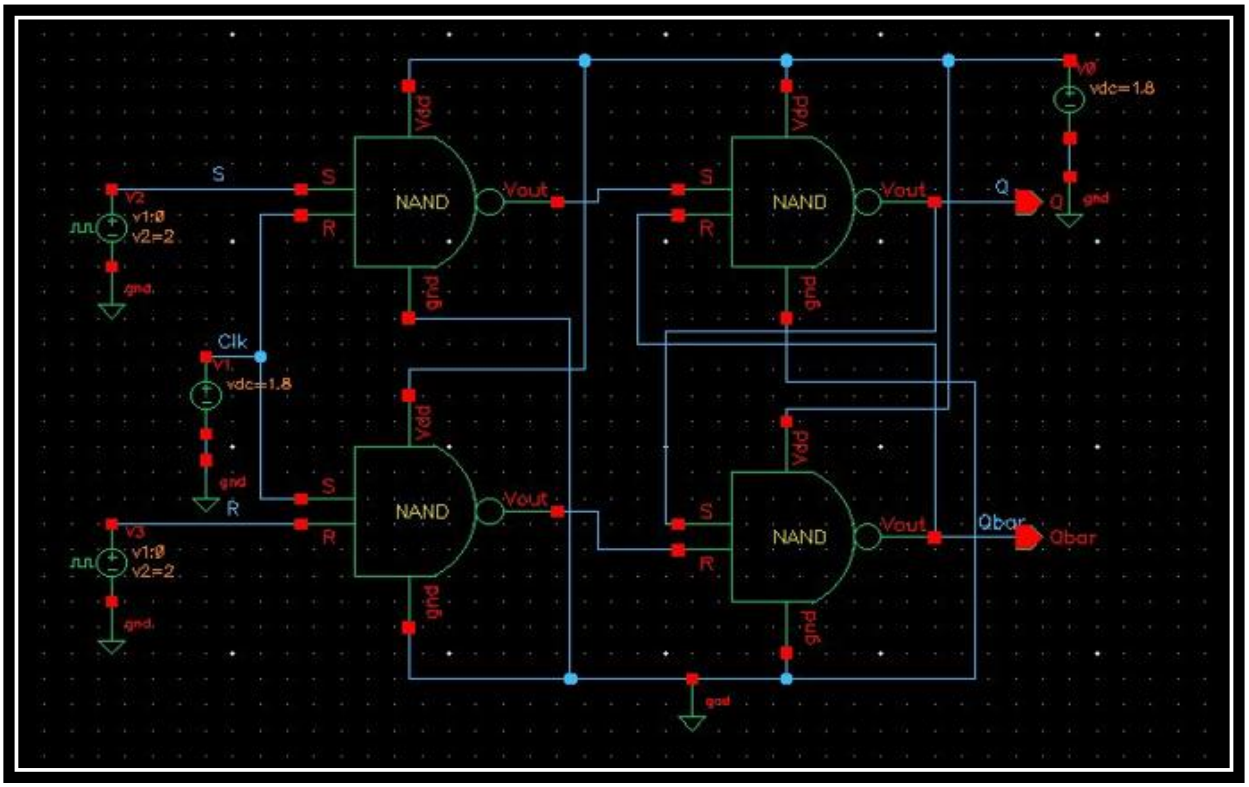

Figure 3.2 Circuit of SR Flip-Flop

4. SIMULATION RESULTS

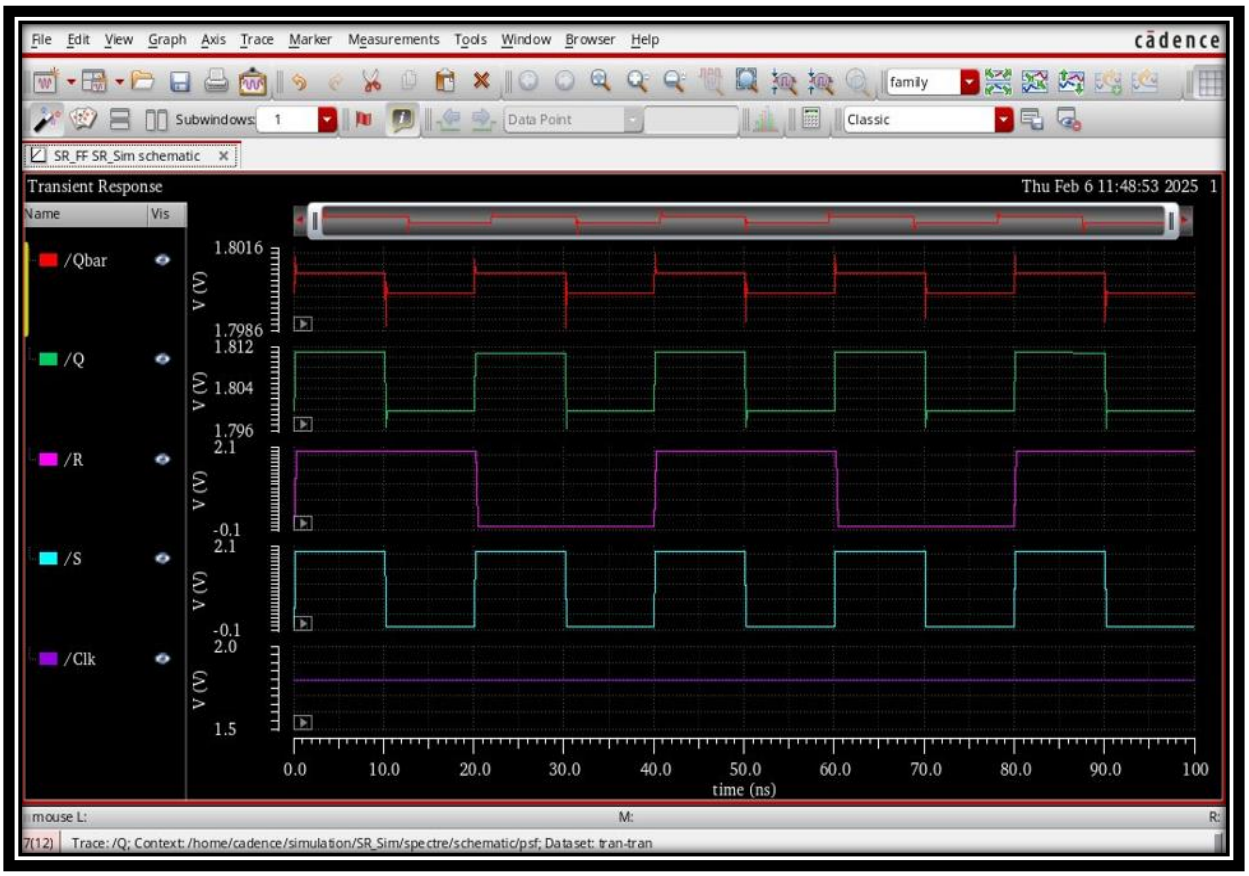

Figure 4.1: Simulation Results of SR Flip-Flop

5. ADVANTAGES AND DISADVANTAGES

5.1 Advantages:-

1. **Simple Design:** Uses only basic logic gates.
2. **Low Power Consumption:** Ideal for power-sensitive applications.
3. **Basic Storage Element:** Forms the foundation of sequential logic circuits.
4. **Versatile Usage:** Can be converted into other types of flip-flops (JK, D, T).
5. **Easy Implementation in CMOS Technology:** Can be efficiently designed using Cadence Virtuoso.

5.2 Disadvantages:-

1. **Indeterminate State:** When S = 1 and R = 1, the output is undefined.
2. **Limited Applications:** Cannot function well in synchronous circuits due to its asynchronous behavior.
3. **Race Condition:** May lead to instability in certain designs.
4. **More Power Consumption in Dynamic Mode:** Continuous switching may increase power dissipation.

6. CONCLUSION

The design and analysis of an **SR flip-flop using NAND gates** in **Cadence Virtuoso** demonstrate its importance as a basic sequential circuit. By utilizing **cross-coupled NAND gates**, we achieve a **bistable circuit** capable of storing one bit of information. The simulation results confirm that the flip-flop successfully transitions between **Set, Reset, and Hold states** based on the applied inputs.

However, the **invalid state (S = 0, R = 0)** highlights a key limitation of the SR flip-flop, which is resolved in more advanced flip-flops like the **JK flip-flop**. Despite this limitation, the SR flip-flop remains widely used in memory elements, control circuits, and data storage applications.

Through Cadence Virtuoso, precise simulation and analysis of the SR flip-flop's behavior help in understanding its real-world applications, making it a crucial component in **digital circuit design and VLSI implementations**.

7. FREQUENTLY ASKED QUESTIONS (FAQs)

Q1. Why use NAND gates for designing an SR flip-flop?

Answer: NAND gates are preferred because they are universal gates, meaning they can implement any Boolean function, including flip-flops, using minimal components.

Q2. How do you eliminate the invalid state in an SR flip-flop?

Answer: The invalid state (S = 1, R = 1) can be avoided by modifying the circuit into a JK Flip-Flop or using additional logic constraints.

Q3. What simulation parameters are necessary for analysis in Cadence Virtuoso?

Answer: Key simulation parameters include transient analysis time, power supply voltage (VDD), and input pulse characteristics (amplitude, width, and period).

Q4. Can this design be extended to a clocked SR flip-flop?

Answer: Yes, by incorporating an additional clock control logic, we can design a clocked SR flip-flop for synchronized operations.

Q5. What happens if both S and R are set to 1?

Answer: This is an invalid condition for an SR flip-flop, leading to an undefined output.